BULK BAG/DRUM/BOX FILLING

MODEL IBC3000

Magnum Systems IBC3000 Fillers are engineered for a variety of materials and containers. The IBC's modular design allows complete flexibility from a free standing manual operation to a fully integrated and automated system handling bags, drums, and boxes.

COMPLETE BULK STORAGE AUTOMATION WITH SIMPLICITY AND FLEXIBILITY

Features

- Up to 3,000 lb capacity
- Adjustable bag clamps for various bag sizes
- Inflatable neck seal and spout
- Double-wall fill spout for dust collection

Optional Features

- Stainless steel construction
- Bag liner inflater
- Automatic bag strap & neck seal release
- Drum or box hood
- Lift platform
- Bag hanging step sequence
- Scale
- Platform vibration
- Pallet dispenser
- Conveyor system
- Integrated controls
- Round product inlet

Materials Typically Handled

- Powders
- Granulars

IBC3000 shown with optional Lift Platform, Pallet Dispenser and Conveyor System

Engineering, Design & Manufacturing
to Keep the Line Moving

BULK BAG/DRUM/BOX FILLING

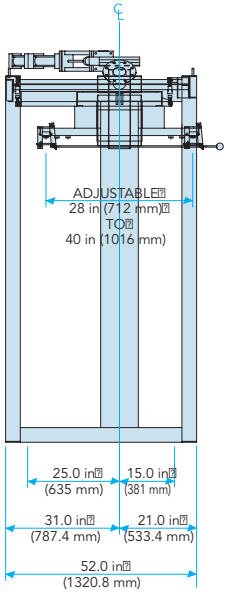

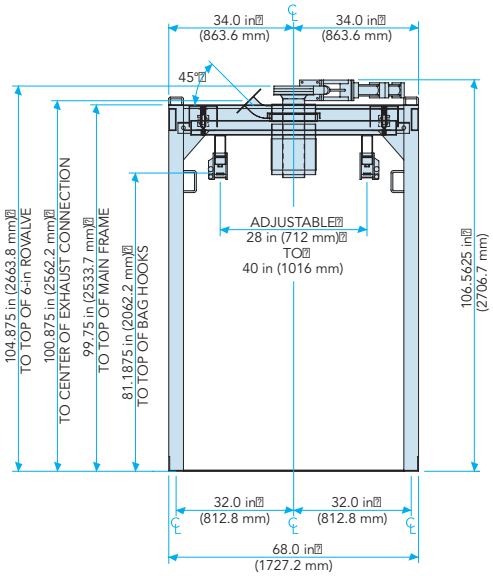

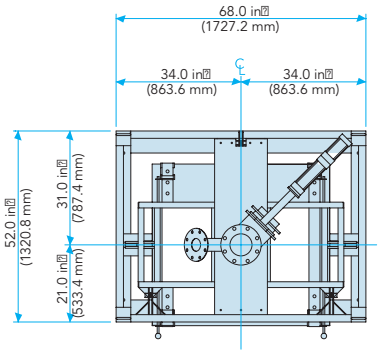

Diagram dimensions are for reference only*

SPECIFICATIONS

Speed	Up to 15 BPH or Up to 50 DPH
Accuracy	Up to 0.1%
Weight Range	100 lb to 3,000 lb (45 kg to 1,361 kg), up to 6,000 lb (2,722 kg) with special options
Construction	Tubular carbon steel blasted and painted
Electrical Requirements	115 Volt, single phase
Air Requirements	90 PSI (6 BAR)

BAG FILLING FEATURES

Inflatable neck seal and spout

Automatic bag strap and neck release

Dual wall discharge for dust collection

MEMBER PMMI

©2017 Magnum Systems, Inc. All rights reserved. Catalog number MS.1010.0917

MAGNUM SYSTEMS

www.magnumsystems.com

Toll Free 888.882.9567 Fax 620.421.5531

Corporate 2205 Jothi Avenue, Parsons, Kansas 67357